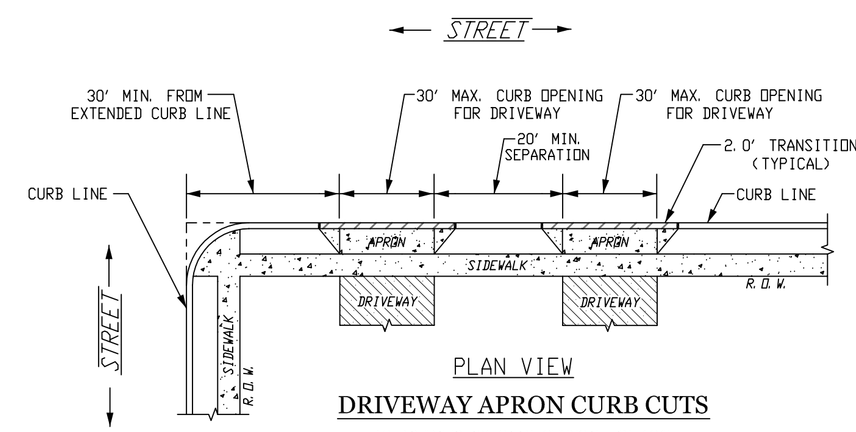

PLAN VIEW

DRIVEWAY APRON CURB CUTS

AS ADOPTED BY CITY COUNCIL IN 1965
ORDINANCE NO. 65-115

NOT TO SCALE

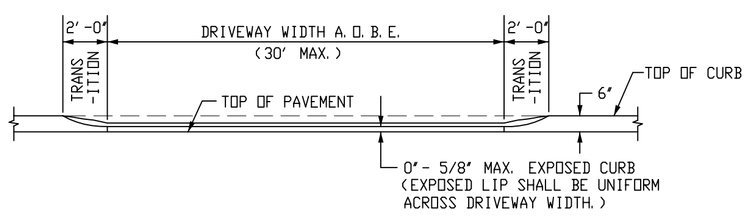

ELEVATION

DRIVEWAY APRON

NOT TO SCALE

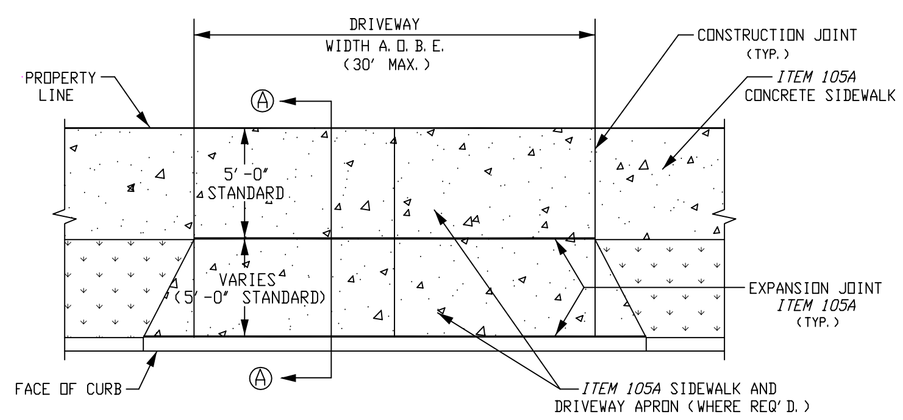

PLAN VIEW

STANDARD DRIVEWAY APRON

(CURBED STREETS WITH SIDEWALK)

NOT TO SCALE

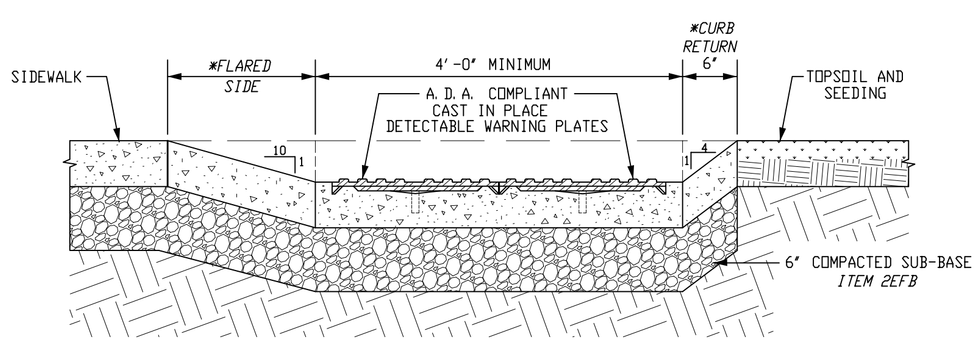

SECTION Ⓑ - Ⓑ

STANDARD HANDICAP RAMP

ITEM 105,105WP

NOT TO SCALE

*WHERE PEDESTRIANS MUST WALK ACROSS RAMP, FLARED SIDES SHALL BE PROVIDED WITH 1:10 MAX. SLOPES. CURB RETURNS SHALL BE PERMITTED WHERE PEDESTRIANS WOULD NOT NORMALLY WALK ACROSS RAMP.

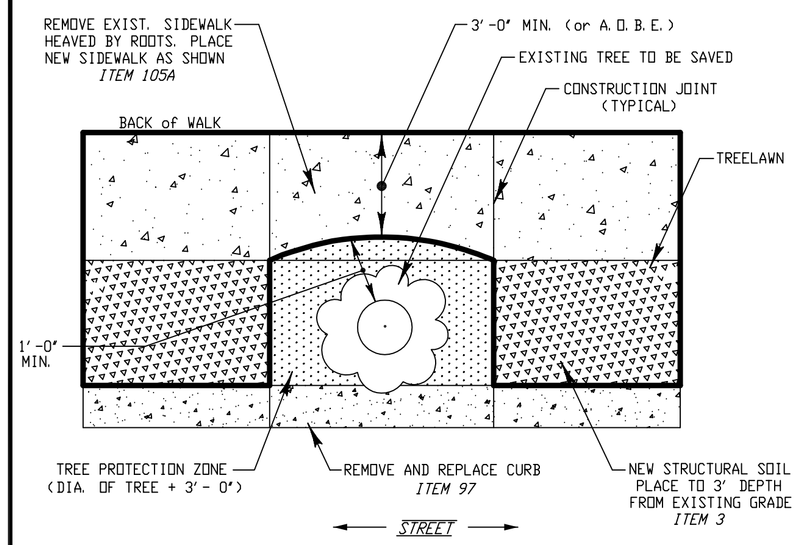

DETAIL

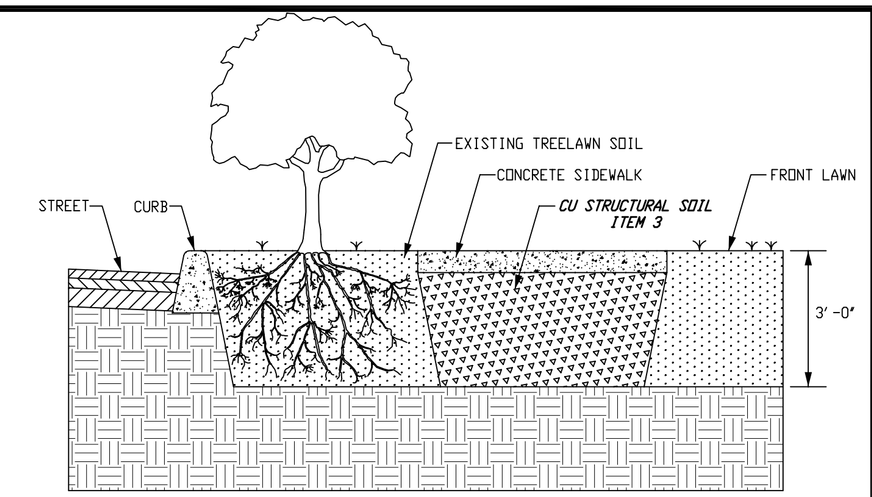

SECTION

STRUCTURAL SOIL

ITEM 3

SIDEWALK & CURB REPLACEMENT AROUND EXISTING TREES & PROPOSED TREE AREAS

(A.O.B.E.)
NOT TO SCALE

NOTES:

1.) CONTRACTOR TO TAKE EXTRA CARE TO PRESERVE AND MAINTAIN ALL TREES THAT ARE NOT BEING REMOVED UNDER THIS PROJECT.

2.) CONTRACTOR IS TO PRESERVE ROOTS WITHIN THE TREE PROTECTION ZONE BY CUTTING NEATLY (WITH A SAW) ALL ROOTS THAT ARE IN THE WAY, COVERING EXPOSED ROOTS WITH MULCH AND WATERING ROOTS DAILY DURING THE PROJECT. CONTRACTOR TO MINIMIZE ALL EXCAVATION IN THIS ZONE.

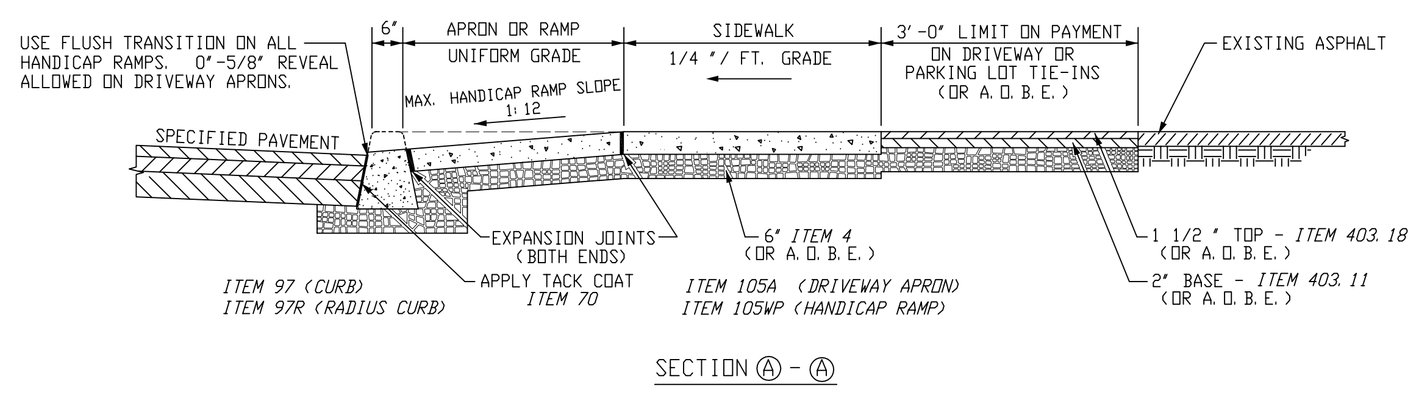

SECTION Ⓐ - Ⓐ

SECTION FOR STANDARD DRIVEWAY APRONS AND STANDARD HANDICAP RAMPS

NOT TO SCALE

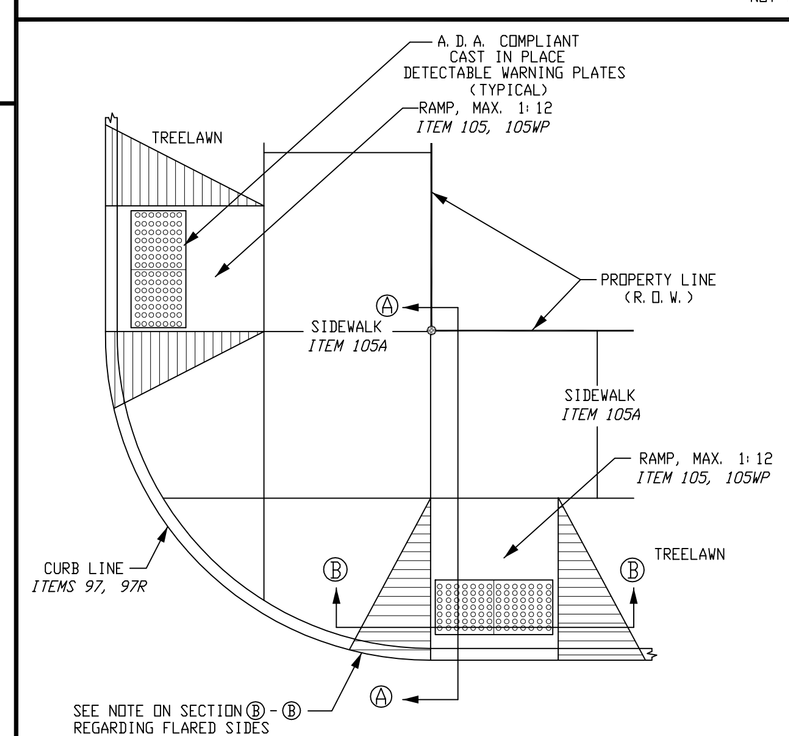

PLAN VIEW

STANDARD HANDICAP RAMP

NOT TO SCALE

NOTE: WHEN SITE INFEASIBILITES PROHIBIT HANDICAP RAMP CONSTRUCTION WITH SLOPES & DIMENSIONS SHOWN, THEY SHALL BE MODIFIED TO COMPLY TO THE MAXIMUM EXTENT FEASIBLE, AS AUTHORIZED BY ENGINEER. ALTERNATE RAMP STYLES SHOWN ON NYS DOT STANDARD SHEET 608-01 AND 608-03 MAY BE CONSIDERED.

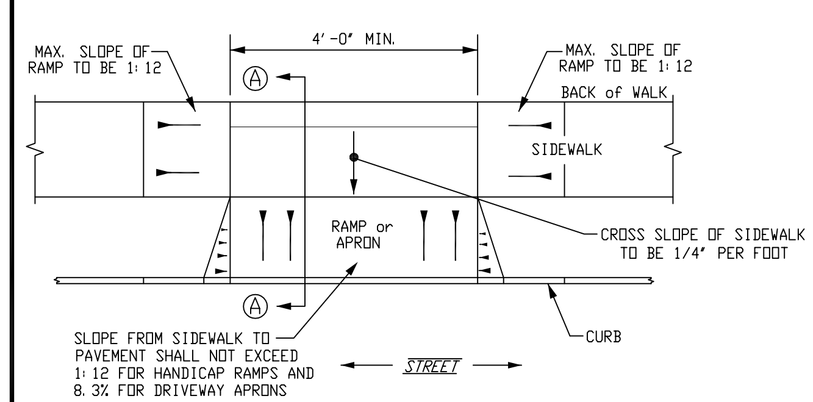

PLAN VIEW

DEPRESSED SIDEWALK FOR DRIVEWAYS / ENTRANCE RAMPS

NOT TO SCALE

NOTE:

DEPRESSED SIDEWALKS SHALL BE USED WHERE DISTANCE BETWEEN CURB AND WALK IS LESS THAN 4 FEET, AND WHERE REQUIRED TO MAINTAIN 1:12 SLOPES ON HANDICAP RAMPS, OR A.O.B.E.

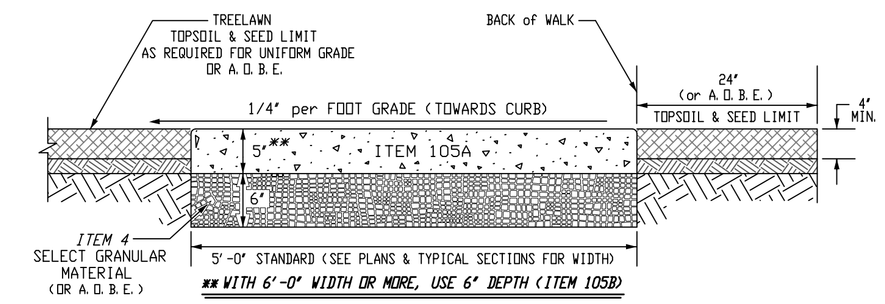

FIBERMESH CONCRETE SIDEWALK

ITEM 105A

NOT TO SCALE

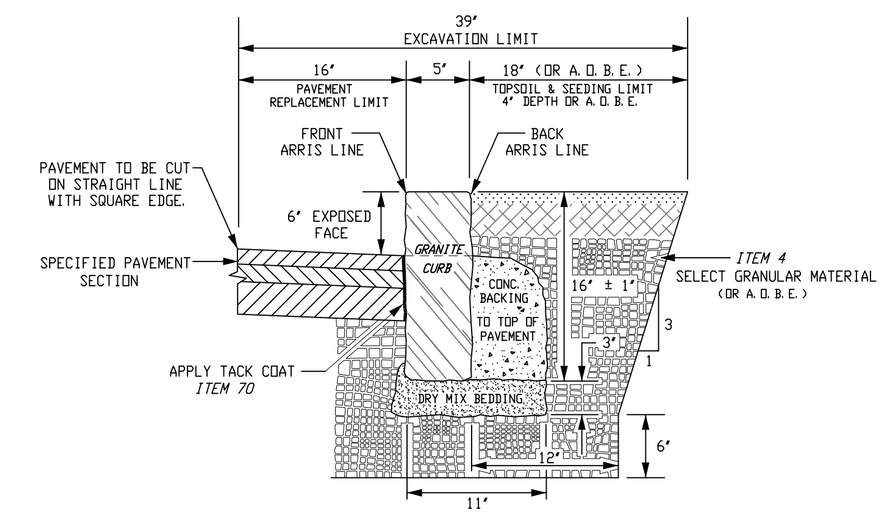

GRANITE CURB DETAIL

SAWED OR HAMMERED TOP,
QUARRY SPLIT FACE

ITEMS 94 & 96SBV

NOT TO SCALE

NOTE:

WHEN GRANITE CURB IS USED ADJACENT TO FLEXIBLE TYPE PAVEMENT, CONCRETE BACKING AND DRY MIX BEDDING SHALL BE UTILIZED AS SHOWN. THE CONTRACTOR SHALL USE ANY N.Y.S.D.O.T. CLASS MIX OR A CONCRETE MIX AS SHOWN (1:3:6 MIX APPROXIMATE)* PAYMENT FOR THE CONCRETE BACKING AND BEDDING, INCLUDING CEMENT, WILL BE INCLUDED IN THE PRICE BID FOR GRANITE CURB.

*WEIGHT IN POUNDS OF AGGREGATE/BAG OF CEMENT

SPEC. GRAVITY	2.60	2.70	2.80	2.90
FINE AGGREGATE	326	338	351	363
COARSE AGGREGATE	535	556	577	597

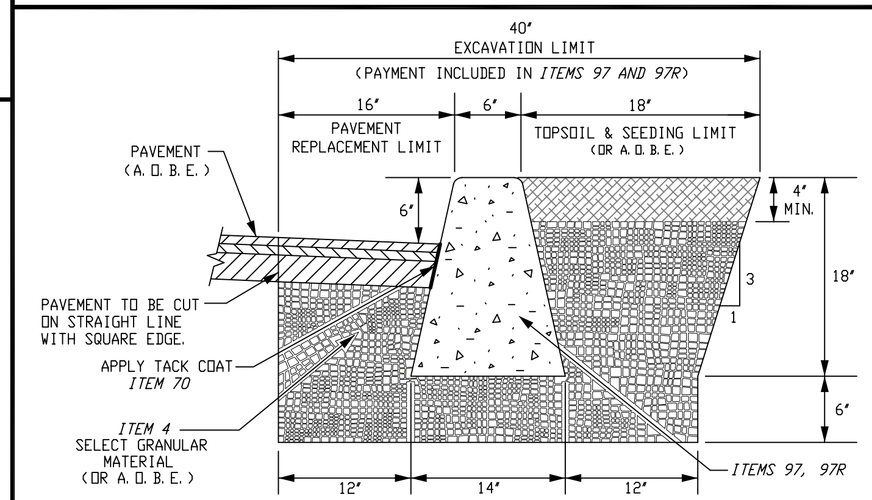

FIBERMESH CONCRETE CURB

ITEM 97

NOT TO SCALE

REV. 4/16, ADA COMPLIANT E.J.E.
REV. 4/07, ADD ITEM 3 W.A.R.
REV. 1/06, ADD ITEM 105WP W.A.R.
REV. 3/04, ADD ITEM 4 W.A.R.

TYPICAL SIDEWALK, CURB & DRIVEWAY

DESIGNED: C.O.B.	**STANDARD DETAILS**
DRAWN: W.A.R.	
CHECKED: D.J.F.	
DATE: MARCH 2004	
SCALE: NOTED	*Richard C. David, Mayor*
SHEET: 1 OF 3	*DEPARTMENT OF ENGINEERING*
	DRAWING NO. 2016