MAINTENANCE & PROTECTION of TRAFFIC
NOTES

GENERAL - REQUIREMENTS & TYPICAL EXAMPLES SHOWN ON THIS SHEET ARE GENERAL, MINIMUM STANDARDS. THE CONTRACTOR SHALL COMPLY WITH HIS APPROVED MAINTENANCE & PROTECTION OF TRAFFIC (M. & P. of T.) PLAN, SPECIFICATIONS OF ITEM 76, AND THE MANUAL OF UNIFORM TRAFFIC CONTROL DEVICES (M.U.T.C.D.) OF THE STATE OF NEW YORK. THE MOST STRINGENT APPLICABLE STANDARDS SHALL APPLY.

1) IN ORDER TO MAINTAIN EFFECTIVE TRAFFIC CONTROL, THE CONTRACTOR SHALL BE RESPONSIBLE FOR MAINTENANCE. HE SHALL MAKE SURE ALL SIGNS, CONES, BARRICADES, ETC. ARE IN PLACE AND IN GOOD CONDITION. CONTRACTOR SHALL COMPLY FULLY WITH THE SPECIFICATIONS OF ITEM 76. IF THE ENGINEER NOTIFIES THE CONTRACTOR OF ANY HAZARDOUS TRAFFIC CONTROL PRACTICES, ALL OPERATIONS IN THAT AREA SHALL BE DISCONTINUED AND IMMEDIATE REMEDIAL ACTION SHALL BE TAKEN TO CORRECT THE SITUATION TO TO THE SATISFACTION OF THE ENGINEER BEFORE WORK IS RESUMED.

2) VEHICLES AND/OR EQUIPMENT BELONGING TO THE CONTRACTOR OR HIS WORKERS SHALL NOT BE PARKED ON THE PAVEMENT, SHOULDERS OR SIDEWALKS ALONG A ROADWAY BEING USED BY THE GENERAL PUBLIC WITHIN THE PROJECT LIMITS. ALSO THE CONTRACTOR SHALL NOT PARK EQUIPMENT NOR STORE MATERIAL OVERNIGHT WHERE IT IS DEEMED A SAFETY HAZARD TO TRAFFIC BY THE ENGINEER.

3) THE CONTRACTOR SHALL TAKE EVERY PRECAUTION TO AVOID DAMAGING EXISTING PAVEMENT, CURBS, AND SIDEWALKS WHEN IT IS NECESSARY FOR THE CONTRACTOR TO MOVE EQUIPMENT THROUGH LOCAL CITY STREETS. THE CONTRACTOR SHALL OBSERVE ALL OF THE RULES AND REGULATIONS AND DIRECTIONS OF THE LOCAL MUNICIPALITIES RELATIVE TO SUCH HANDLING OF EQUIPMENT AND TAKE SUCH PROTECTIVE MEASURES AS MAY BE ORDERED BY THE ENGINEER. LOCAL STREET PAVEMENTS, CURBS, SIDEWALKS, ETC. LOCATED WITHIN THE CONTRACT LIMITS THAT ARE NOT SCHEDULED TO BE REPLACED AND ARE DAMAGED BY THE CONTRACTOR THROUGH DISREGARD OF THESE PROVISIONS SHALL BE RESTORED AT HIS/HER SOLE COST AND EXPENSE.

4) PROGRESS PERMANENT SIGNALS, SIGNING AND PAVEMENT MARKINGS AS APPROPRIATE. ALL SIGNS, MARKINGS AND SIGNALS MUST BE IN PLACE BEFORE THE OPENING OF ANY PORTIONS OF PROJECT TO ACCOMMODATE FINAL AND DETOUR TRAFFIC PATTERNS. CARE MUST BE TAKEN TO INSURE THAT FINAL SIGNALS, SIGNING AND PAVEMENT MARKINGS WILL NOT BE CONTRADICTORY TO PROPOSED OPERATIONS DURING ANY ONE PHASE. FINAL SIGNALS OR SIGNS IN PLACE, BUT NOT IN USE FOR DIRECTING TRAFFIC, SHALL BE COVERED.

5) LOCAL LAW ENFORCEMENT, THE CITY OF BINGHAMTON FIRE DEPARTMENT, AND D.P.W. DISPATCH (772-7020) SHALL BE NOTIFIED BY CONTRACTOR OF CHANGES TO THE TRAFFIC PATTERNS AND OF ANY OTHER INFORMATION FOR COORDINATION THEY MAY REQUIRE.

6) PEDESTRIAN TRAFFIC INCLUDING ACCESS TO ALL BUILDINGS WILL BE MAINTAINED AT ALL TIMES.

7) NO MATERIAL SHALL BE STORED WITHIN THE HIGHWAY BOUNDARY AREA, EXCEPT THAT WHICH WILL BE PLACED THAT DAY WITHIN THE PROTECTED WORK ZONE. ALL CONSTRUCTION EQUIPMENT, MATERIALS OR VEHICLES SHALL BE PLACED TO THE SATISFACTION OF THE ENGINEER.

8) WORK ZONES SHOULD BE LIMITED TO ONE SIDE OF THE TRAVELED WAY AT A TIME. WORK ZONES ON OPPOSITE SIDES OF THE ROAD SHALL NOT OVERLAP. WORK ZONE IS DEFINED AS THAT AREA IN WHICH TRAFFIC IS RESTRICTED BECAUSE OF CONSTRUCTION ACTIVITIES OR THAT AREA WHICH INVOLVES A DROP-OFF NEXT TO THE PAVEMENT.

9) THE CONTRACTOR SHALL COORDINATE ALL PUBLIC AND PRIVATE UTILITY AND MAINTENANCE WORK WITH RESPECT TO SITE ACCESS, TRAFFIC CONTROL, ETC. WITH OTHER CONTRACTORS THAT MAY BE IN OPERATION THROUGHOUT THE PROJECT LIMITS.

10) THE CONTRACTOR SHALL PROVIDE A SMOOTH TRANSITION BETWEEN NEW PAVEMENT, TEMPORARY CONNECTIONS, ETC., AND ADJACENT EXISTING PAVEMENT. THE COST TO BE INCLUDED IN THE BID PRICE FOR ITEM 76, "MAINTENANCE AND PROTECTION OF TRAFFIC". NO DROP OFF GREATER THAN TWO (2) INCHES SHALL BE ALLOWED. A DROP OFF IS CONSIDERED ELIMINATED IF TAPERED AWAY BY A ONE ON FOUR SLOPE OR FLATTER.

11) ADVANCE WARNING - WHEN ANY POTENTIAL HAZARD TO TRAFFIC EXISTS, A "ROAD CONSTRUCTION AHEAD" SIGN SHALL BE PLACED 200' (MIN.) AHEAD OF THE WORK ZONE AS AN ADVANCED WARNING. FOR APPROPRIATE DISTANCES FOR SPECIFIC WORK TYPES, CONSULT M.U.T.C.D. WHEN A "ROAD CONSTRUCTION AHEAD" SIGN IS USED, AN "END CONSTRUCTION" SIGN SHALL BE PLACED AT THE ENDS OF THE CONSTRUCTION AREA.

12) LANE SHIFTS & OBSTRUCTIONS - TRAFFIC CONES SHALL BE PLACED IN THE OBSTRUCTED LANE AT 20 FOOT INTERVALS (MAX.) FROM THE ADVANCED WARNING TO THE WORK AREA TO GUIDE THE FLOW OF VEHICULAR TRAFFIC AROUND THE WORK AREA.

13) THE CONTRACTOR SHALL MAINTAIN ROADWAYS, SIDEWALKS, & CROSSWALKS TO SUCH AN EXTENT AS WILL GIVE SAFE, UNIMPEDED, PRACTICAL USE. THE WORK SHALL BE CONDUCTED AS TO CAUSE A MINIMUM OF INCONVENIENCE TO PUBLIC TRAVEL AND TO PERMIT SAFE AND CONVENIENT ACCESS TO PROPERTIES ALONG THE LINE OF WORK.

14) WHENEVER IT BECOMES NECESSARY TO CLOSE A STREET COMPLETELY TO VEHICULAR TRAFFIC, THE FOLLOWING CONDITIONS SHALL BE MET:

a) THE CONTRACTOR SHALL SUBMIT A FORMAL WRITTEN REQUEST TO THE ENGINEER SPECIFYING REASON FOR THE CLOSING, THE PERIOD OF TIME FOR WHICH THE CLOSING SHALL BE NECESSARY, AND THE PROPOSED DETOUR TO BE USED.

b) AN AFFIRMATIVE WRITTEN REPLY FROM THE ENGINEER MUST BE OBTAINED PRIOR TO THE CLOSING OF THE STREET.

15) IN THE EVENT THAT TRAFFIC IS NOT MAINTAINED ADEQUATELY AND/OR SAFELY ON ANY PART OF THE CONTRACT ON ANY DAY, NO PAYMENT UNDER ITEM 76 WILL BE MADE FOR THAT DAY, AS OUTLINED IN THE SPECIFICATIONS.

16) ALL HYDRANTS, FIRE ALARM BOXES, WATER GATES, MANHOLES, AND CATCHBASINS SHALL BE KEPT ACCESSIBLE FOR USE.

SITE ACCESS AND CONTROL
NOTES

1) THE CONTRACTOR SHALL MAINTAIN PERSONNEL TO PATROL THE CONTRACT AREA AS NECESSARY TO ENSURE THAT CONDITIONS ON THE SITE ARE ADEQUATE FOR PUBLIC SAFETY AND CONVENIENCE AT ALL TIMES. THEY SHALL IMMEDIATELY REPORT THE PRESENCE OF ANY UNSAFE CONDITION TO THE ENGINEER. PAYMENT FOR THIS WORK SHALL BE INCLUDED IN THE UNIT BID PRICE FOR ITEM 76, "MAINTENANCE AND PROTECTION OF TRAFFIC".

2) WHEN THE VISIBILITY OF THE TRAVELING PUBLIC IS RESTRICTED DUE TO WEATHER CONDITIONS AND/OR THE WORK OPERATIONS COMMENCE PRIOR TO DAWN OR CONTINUE BEYOND DUSK, AND WHEN ANY HAZARDS OR OBSTRUCTIONS EXIST AT NIGHT, FLASHING BEACONS AND STEADY BURNING LIGHTS ON SUPPORTS OR BARRICADES ALONG WITH APPROPRIATE SIGNAGE SHALL BE PROVIDED BY THE CONTRACTOR AND PLACED AT ALL OBSTRUCTIONS AND HAZARDS.

3) THE CONTRACTOR SHALL SCHEDULE OPERATIONS SO THAT TRAFFIC WILL BE MAINTAINED ON A PAVED SURFACE DURING THE WINTER MONTHS OR AT ANY TIME THE CONTRACT IS SUSPENDED IN EXCESS OF TWO WEEKS. HARD SURFACED PAVEMENT SHALL BE CONSIDERED THE EXISTING PAVEMENT OR THE NEW PAVEMENT COMPLETED TO AT LEAST THE BASE COURSE.

4) WHENEVER TRAFFIC IS LIMITED TO ANY ONE-WAY OPERATION, FLAGGERS SHALL BE UTILIZED. THE FLAGGERS WILL BE REQUIRED TO USE RADIO OR FIELD TELEPHONE CONTACT WHEN THEY ARE MAINTAINING ONE-WAY TRAFFIC AND ONE FLAGGER IS NOT VISIBLE TO THE OTHER OR IF, IN THE OPINION OF THE ENGINEER, THIS COMMUNICATION IS NECESSARY. THE COST OF ANY RADIO OR FIELD TELEPHONES USED SHALL BE INCLUDED IN THE BID PRICE FOR ITEM 76, "MAINTENANCE AND PROTECTION OF TRAFFIC".

5) ALL ROADWAY AREAS TEMPORARILY CLOSED FOR TRENCH, CULVERT, OR CONDUIT EXCAVATION, OR EXCAVATION REQUIRED FOR ALTERING DRAINAGE STRUCTURES SHALL BE REOPENED AT THE END OF THE WORK DAY. AT ALL TIMES WHEN WORK IS NOT IN PROGRESS, ALL OPENINGS SHALL BE COVERED WITH STEEL PLATES OR SHALL BE BACKFILLED IN ACCORDANCE WITH ITEM 5, "TRENCH EXCAVATION AND BACKFILL" (OR THE DETAIL ON THE DRAWING "PAVEMENT RESTORATION, EXCAVATION AND BACKFILL DETAILS") TO A DEPTH AS ORDERED BY THE ENGINEER. IF ANCHORED STEEL PLATES ARE THE CHOSEN OPTION, THE CONTRACTOR SHALL SUBMIT THE PROPOSED METHOD OF ANCHORING THE STEEL PLATES TO THE ENGINEER FOR APPROVAL PRIOR TO STARTING ANY ROADWAY EXCAVATION. THE STEEL PLATES SHALL BE RAMPED WITH A BITUMINOUS MATERIAL PRIOR TO OPENING THE LANE. THE COST OF THIS WORK, INCLUDING ALL LABOR, MATERIALS, EQUIPMENT AND ANY RE-EXCAVATION OF TEMPORARY RESTORED AREAS SHALL BE INCLUDED IN THE BID PRICE FOR ITEM 76, "MAINTENANCE AND PROTECTION OF TRAFFIC".

6) PUBLIC TRANSPORTATION SERVICES ARE PROVIDED TO THE PUBLIC AT AREAS WITHIN THE CONTRACT LIMITS. THE CONTRACTOR SHALL BE RESPONSIBLE FOR MAINTAINING THESE AREAS AND ALLOWING FOR ADEQUATE ASSEMBLAGE SPACE FOR PASSENGERS DURING ALL PHASES OF OPERATIONS FOR THE DURATION OF THE CONTRACT.

7) THE CONTRACTOR SHALL PROVIDE AN ADEQUATE NUMBER OF SURPLUS CONES (20 MIN.), BARRICADES (5 MIN.), DRUMS (10 MIN.), LIGHTS (5 MIN.), AND SIGNAGE, ETC. LOCATED CENTRALLY ON THE JOB SITE FOR USE IN EMERGENCY SITUATIONS. PAYMENT SHALL BE INCLUDED IN ITEM 76, "MAINTENANCE AND PROTECTION OF TRAFFIC".

8) CONSTRUCTION DRUMS MUST BE PLASTIC AND OF AN APPROVED DESIGN. THE DRUMS AND VERTICAL PANELS SHALL BE PLACED ACCORDING TO SECTION 292 OF THE M.U.T.C.D. AND TABLE 619-1 OF THE N.Y.S. SPECIFICATIONS.

9) SIGNS INTENDED FOR USE AT NIGHT SHALL BE REFLECTORIZED OR ILLUMINATED.

10) ALL SIGNS SHALL CONFORM TO, AND SHALL BE ERECTED IN ACCORDANCE WITH THE *MANUAL OF UNIFORM TRAFFIC TRAFFIC CONTROL DEVICES* (M.U.T.C.D.) OF THE STATE OF NEW YORK.

11) EXCAVATIONS MAY BE TEMPORARILY BACKFILLED FROM SUBGRADE TO EXISTING PAVEMENT LEVEL WITH ITEM 2EFB (SELECT GRANULAR FILL), SUITABLE MATERIAL, OR A.D.B.E. UNTIL PAVING CAN BE ACCOMPLISHED. TEMPORARY ASPHALT PAVING SHALL BE USED ON HEAVILY TRAVELED STREETS OR A.D.B.E. CONTRACTOR SHALL MAINTAIN A SMOOTH TRAVELED WAY AT ALL TIMES.

LEGEND:

CONSTRUCTION SIGN | BARRICADE | CONE | FLAG TREE | FLAGGER | WORK AREA | PAVEMENT MARKING

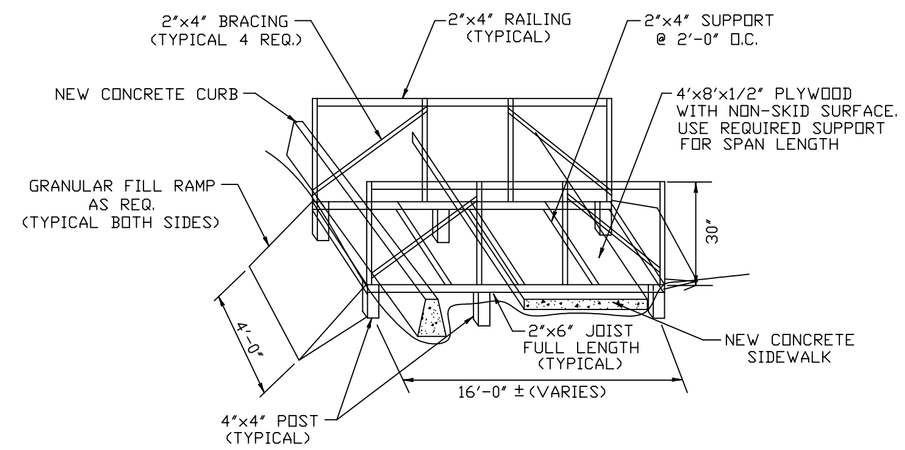

TEMPORARY SIDEWALK ENTRANCE
DETAIL
NO SCALE

NOTES:
1) TEMPORARY SIDEWALKS SHALL BE INSTALLED AT ALL RESIDENCES AND BUSINESSES DURING THE TIME WHEN THE NEW CURB & SIDEWALK ARE BEING INSTALLED.
2) THE CONTRACTOR SHALL SUBMIT A DETAIL OF PROPOSED TEMPORARY SIDEWALK TO THE ENGINEER FOR APPROVAL PRIOR TO ANY INSTALLATION.
3) THE TEMPORARY SIDEWALK SHALL BE MAINTAINED UNTIL NEW CURB & SIDEWALK ARE ADEQUATELY BACKFILLED TO ALLOW FOR SAFE PEDESTRIAN TRAFFIC.
4) TEMPORARY SIDEWALKS TO BE INCLUDED IN THE BID PRICE FOR MAINTENANCE AND PROTECTION OF TRAFFIC, ITEM 76.
5) TEMPORARY SIDEWALK SHALL BE USED AT ALL PROPERTIES THAT HAVE EXISTING CURBS AND WALKS REMOVED FOR NEW INSTALLATION.
6) THE CONTRACTOR MAY ELECT TO USE A SHORTER TEMPORARY WALK TO SPAN JUST THE NEW CURB OR NEW SIDEWALK WHEN INSTALLATION AND BACKFILL IS COMPLETED PRIOR TO STARTING NEW CURB AND/OR SIDEWALK AT THAT PROPERTY.

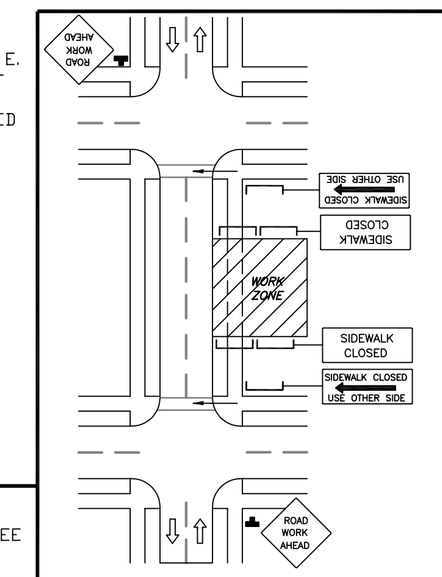

TYPICAL EXAMPLE
OF SIDEWALK CLOSURE

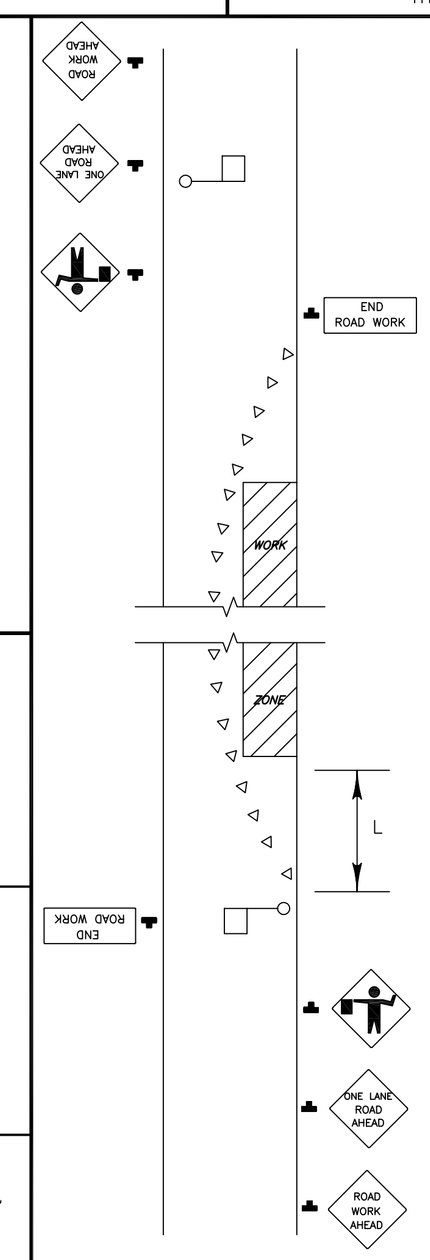

NOTE:
FOR TRANSITION LENGTH, L, SEE SECTION 301.12 OF M.U.T.C.D. (L SHOULD BE 50' MINIMUM)

TYPICAL EXAMPLE
OF TRAFFIC CONTROL FOR
ONE LANE SECTIONS ON TWO LANE HIGHWAYS
WITH FLAGGERS

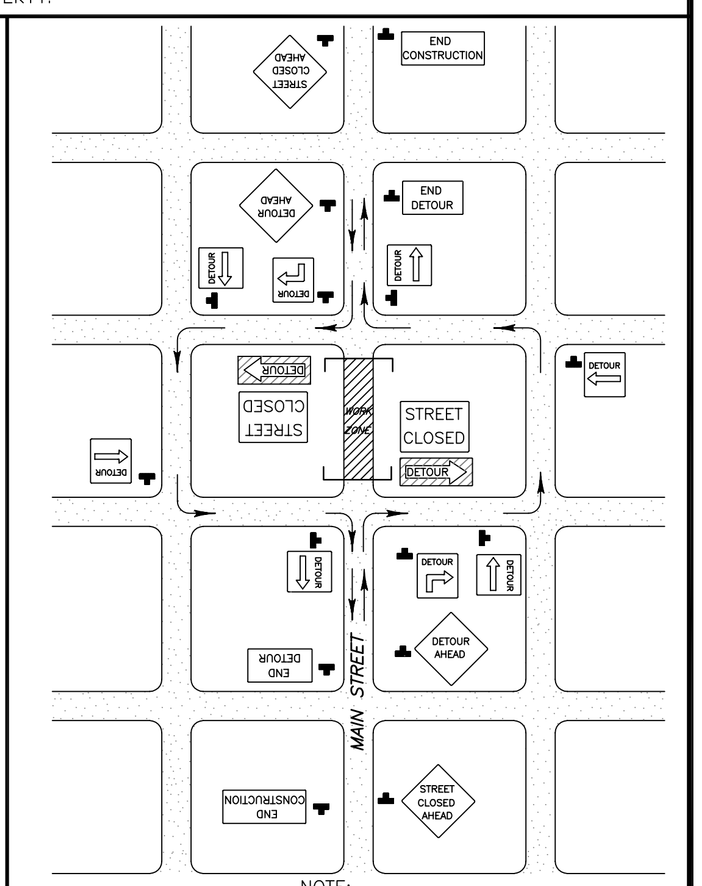

NOTE:
STREET NAMES MAY BE USED WHEN DESIRABLE FOR DIRECTING DETOURED TRAFFIC.

KEY:
TYPE 3 BARRICADE | CONSTRUCTION SIGN | WORK AREA

TYPICAL EXAMPLE
OF DETOUR SIGNING FOR ROAD CLOSURE IN A STREET GRID

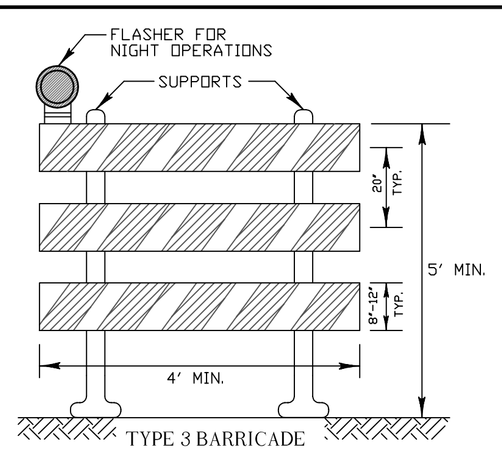

TYPE 3 BARRICADE

NOTES:
1. RAIL STRIPES SHALL BE 6 INCHES WIDE AND SHALL BE ALTERNATING ORANGE & WHITE.
2. THE SIDES OF BARRICADES FACING TRAFFIC SHALL HAVE RETROREFLECTIVE RAIL FACES.

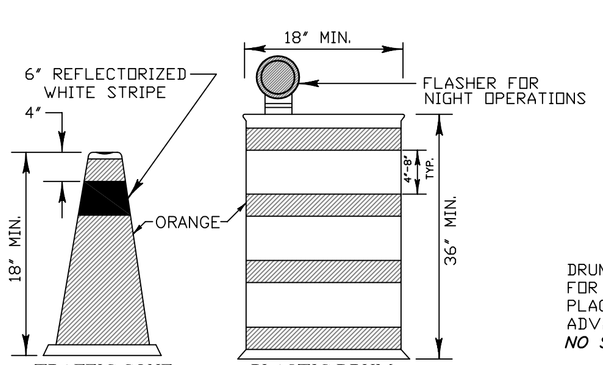

TRAFFIC CONE | PLASTIC DRUM

NOTE:
DRUMS SHALL BE REFLECTORIZED FOR USE AT NIGHT AND NEVER PLACED IN THE ROADWAY WITHOUT ADVANCE WARNING SIGNS.
NO STEEL DRUMS SHALL BE ALLOWED.

1. WORK ALONG CENTER LINE OF A TWO LANE, TWO WAY ROADWAY WITH WIDTH AVAILABLE FOR TWO WAY TRAFFIC.

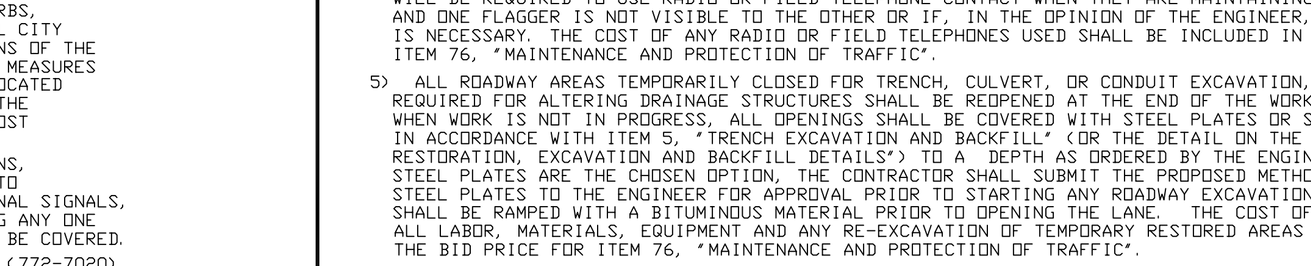

2. WORK ALONG SIDE OF TWO LANE, TWO WAY ROADWAY WITH WIDTH AVAILABLE FOR TWO WAY TRAFFIC.

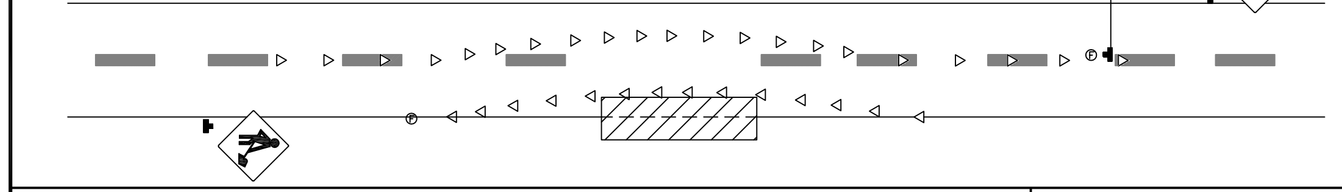

3. WORK IN ONE LANE OF MULTI-LANE ROADWAY WITH WIDTH AVAILABLE FOR TWO WAY TRAFFIC.

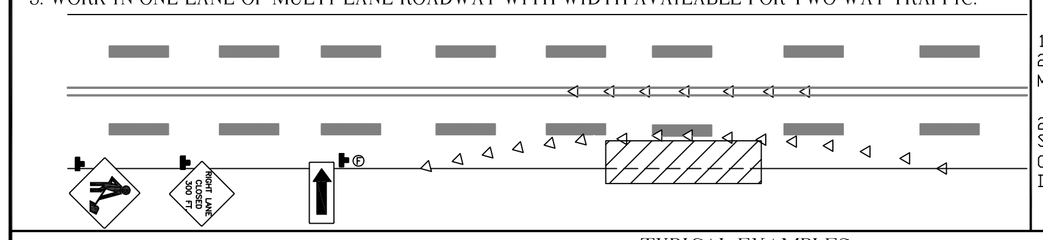

NOTES:
1. SEE SECTIONS 214.3, 231.4, 238.4, 238.6, 301.2, & SUBCHAPTER 'G' OF M.U.T.C.D.
2. TRANSITION LENGTH FOR LANE SHIFTS SHOULD BE 75' MIN. CONSULT M.U.T.C.D. FOR APPROPRIATE DISTANCES FOR SPECIFIC WORK TYPES.

TYPICAL EXAMPLES
OF LANE SHIFTS AT SHORT DURATION WORK AREAS ON LOW SPEED HIGHWAYS.

REV. DATE	REVISION
MARCH '04	ADD NOTE #11 W.A.R.

MAINTENANCE & PROTECTION OF TRAFFIC

STANDARD DETAILS

DESIGNED:	C.O.B.
DRAWN:	W.A.R.
CHECKED:	D.J.F.
DATE:	MARCH 2004
SCALE:	NONE
SHEET:	? OF ?

Richard C. David, Mayor
DEPARTMENT OF ENGINEERING

DRAWING NO. 2015