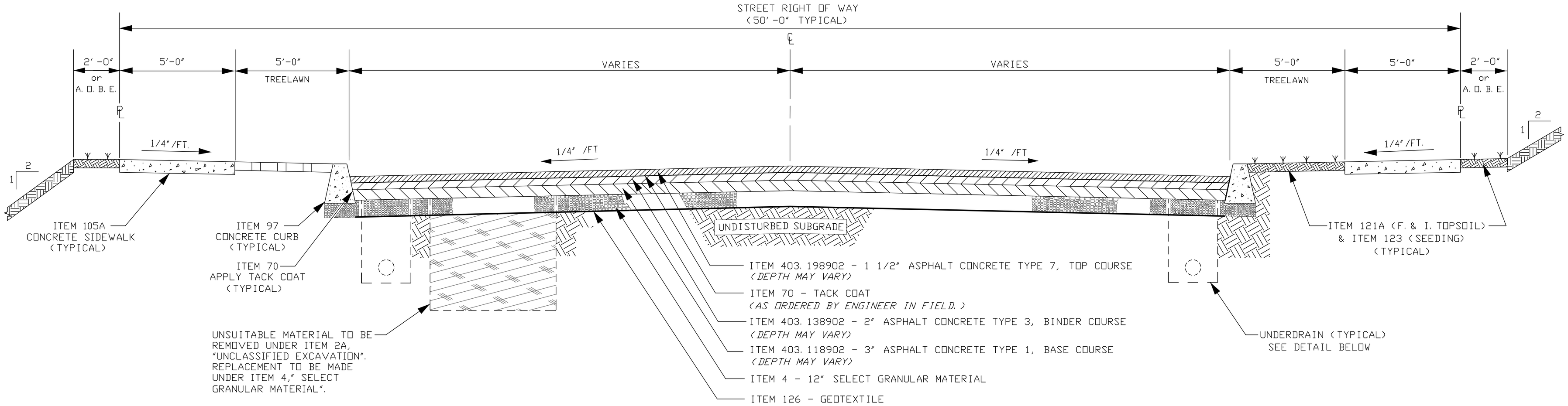

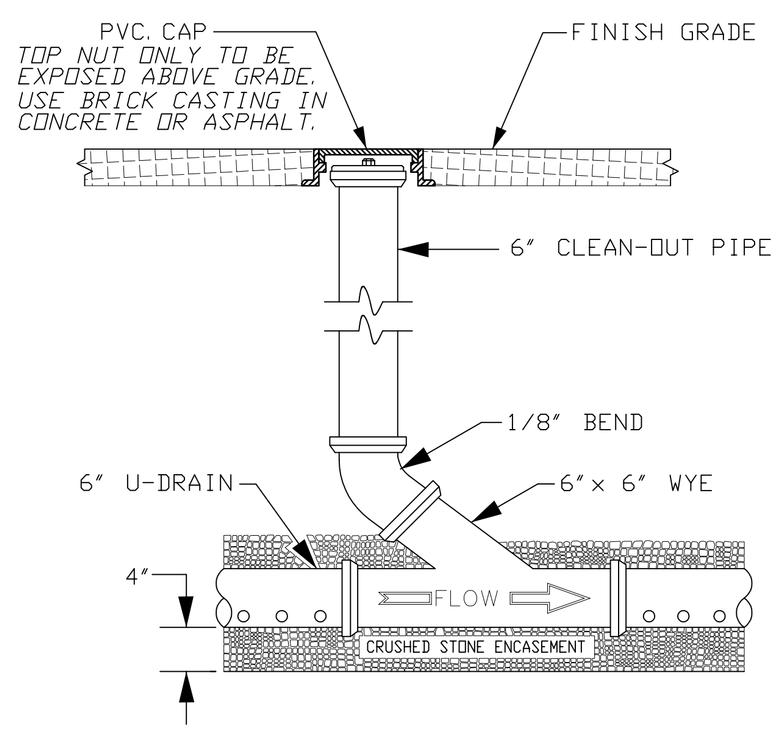

INSTALL CLEAN-OUTS 200' C-C OR A. O. B. E.

CLEAN-OUT DETAIL ITEM 11PX-6

N.T.S.

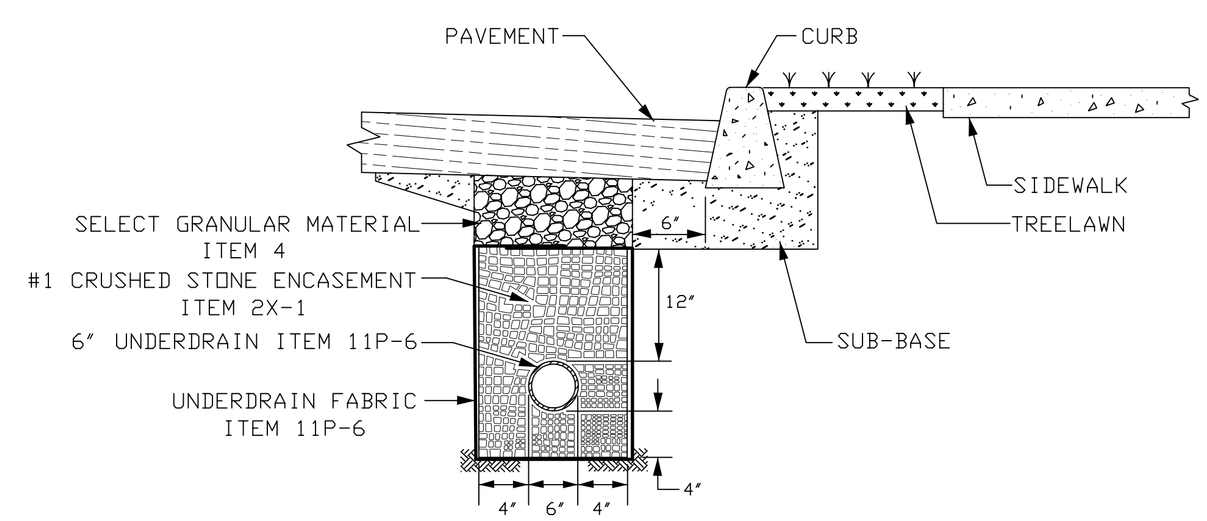

NOTE: TRENCH EXCAVATION PAID UNDER ITEM 5-1 & FABRIC PAID UNDER ITEM 11P-6

UNDERDRAIN DETAIL ITEM 11P-6

N.T.S.

NOTES:

1) CONTRACTOR SHALL ENSURE THAT ALL SURFACES GRADE TO DRAIN. WHERE TYPICAL SIDEWALK & TREELAWN SLOPE OF 1/4" PER FOOT DOES NOT ACHIEVE THIS, AND MATCH EXISTING BACK OF WALK ELEVATIONS, THEN TREELAWN AND SIDEWALK SLOPES SHALL BE ADJUSTED AS APPROVED BY ENGINEER OR HIS DESIGNATED REPRESENTATIVE.

2) DIMENSIONS OF TYPICAL SECTION MAY VARY TO MEET EXISTING STREET CONDITIONS, AS INDICATED ON THE PLANS, OR AS ORDERED BY THE ENGINEER (A. O. B. E.).

DATE	REVISION
REV. FEBRUARY 2015	ADD MARSHALL MIX JEL
REV. MARCH '04	ADD ITEM 4, DELETE ITEM 2EFB W.A.R.

TYPICAL STREET SECTION
MARSHALL MIX

DESIGNED: C.O.B.	**DETAILS**
DRAWN: W.A.R.	
CHECKED: D.J.F.	
DATE: MARCH 2005	
SCALE: NOTED	*Richard C. David, Mayor* *DEPARTMENT OF ENGINEERING*
SHEET: ? OF ?	DRAWING NO. 2015

File name: K:\Standard Details Layout\dwg\ACAD-2012 Autocad version.dwg Tab Name: X SEC MARSHALL Apr 16, 2015-12:20pm jelinsky